EN ISO 9170-2 AGSS TYPE 1

TERMINAL UNITS

The **EN ISO 9170-2 AGSS** type 1 terminal units for anesthetic gas scavenging systems are the points allowing operators in hospitals to connect the appropriate quick couplings to safely dispose the exceeding anesthetic gases and vapors away from the clinical environment.

The main purpose is to minimize the pollution of the premises where anesthetics are used. Two main installation principles are available:

VENTURI TYPE | The suction system is based on the Venturi principle, on the basis of which an injector supplied with compressed air at a pressure of 4 bar, produces a constant suction (set by the installer) suitable for discharging anaesthetic gases outside the room where they are used.

BLOWER TYPE | A blower generates a constant suction inside the centralized suction system designed to eliminate the anaesthetic gases from the room where they are used; the installer can also adjust the flow discharged directly on the base block by means of a variable section connector.

FLUSH-MOUNTED INSTALLATION

SURFACE INSTALLATION

INFO COMPANY: Flow Meter Spa - Via del Lino, 6 - 24040 Levate - Bergamo - ITALIA
Tel. +39 035 594047 I Fax +39 035 59482 I info@flowmeter.it I **www.flowmeter.it**
C.F. e P.Iva IT01737040160

EN ISO 9170-2 AGSS TYPE 1 TERMINAL UNITS | **COMPONENTS**

Painted stainless steel cover panel, for flush-mounted case for **EN ISO 9170-2 AGSS type 1** outlet with front access for the outlet simplified calibration.

Flush-mounted case, complete with disposable panel, suitable for housing **EN ISO 9170-2 AGSS type 1** sockets and outlet.

EN ISO 9170-2 AGSS type 1 outlet.

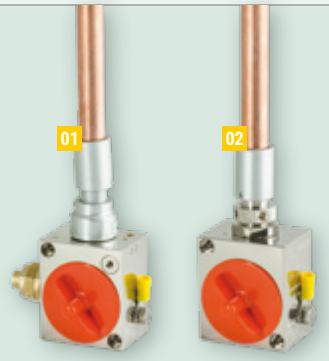

01. VENTURI TYPE | Socket for **EN ISO 9170-2 AGSS type 1** outlet with Venturi system. An injector supplies compressed air at 4 bars creating a constant suction (the setting value can be adjusted during installation) suitable to eliminate the anesthetic gases from the area where they are used. Front access for the simplified calibration without need to disassemble the outlet or to open the cover panel.

02. BLOWER TYPE | Socket for **EN ISO 9170-2 AGSS type 1** outlet for blower. A blower generates a constant suction inside the central system for the scavenging of anesthetic gases from the area where they are used. The flow can be adjusted during the installation directly on the socket by means of a variable section connector.

01. Probe for **EN ISO 9170-2 AGSS type 1** outlet.

02. Pneumatic gauge indicating the terminal unit status, to be connected to the socket of the **EN ISO 9170-2 AGSS** type 1 outlet with Venturi system.

Surface mounted case, complete with varnished stainless steel cover panel, suitable for housing **EN ISO 9170-2 AGSS type 1** sockets and outlets with front access for the outlet simplified calibration.

INFO COMPANY: Flow Meter Spa - Via del Lino, 6 - 24040 Levate - Bergamo - ITALIA
Tel. +39 035 594047 I Fax +39 035 59482 I info@flowmeter.it I **www.flowmeter.it**
C.F. e P.Iva IT01737040160

EN ISO 9170-2 AGSS TYPE 1 TERMINAL UNITS | **DIRECTORY**

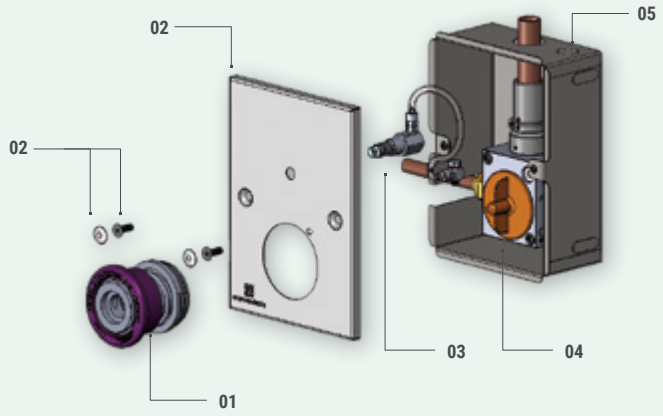

FLUSH-MOUNTED INSTALLATION FOR **EN ISO 9170-2 AGSS TYPE 1** OUTLET WITH VENTURI SYSTEM

DIRECTORY - COMPONENTS DETAIL

01. EN ISO 9170-2 AGSS type 1 outlet
02. S/S cover panel with screws
03. Pneumatic gauge
04. Socket for EN ISO 9170-2 AGSS type 1 outlet with Venturi system
05. Flush-mounted case

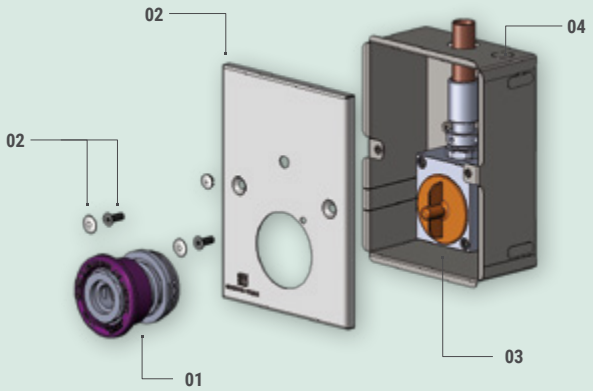

FLUSH-MOUNTED INSTALLATION FOR **EN ISO 9170-2 AGSS TYPE 1** OUTLET FOR BLOWER

DIRECTORY - COMPONENTS DETAIL

01. EN ISO 9170-2 AGSS type 1 outlet
02. S/S cover panel with screws
03. Socket for EN ISO 9170-2 AGSS type 1 outlet for blower
04. Flush-mounted case

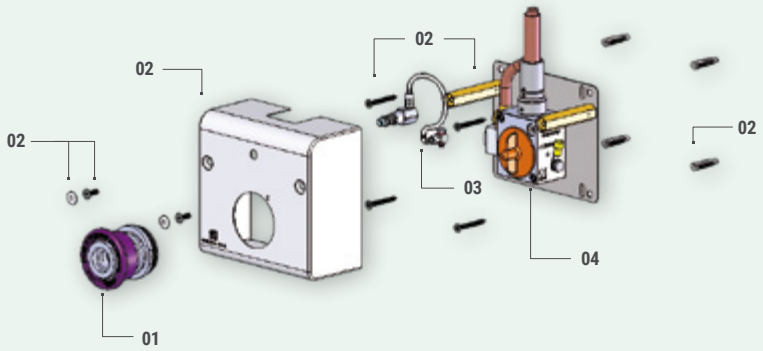

SURFACE INSTALLATION FOR **EN ISO 9170-2 AGSS TYPE 1** OUTLET WITH VENTURI SYSTEM

DIRECTORY - COMPONENTS DETAIL

01. EN ISO 9170-2 AGSS type 1 outlet
02. Surface mounted case with screws and spacers
03. Pneumatic gauge
04. Socket for EN ISO 9170-2 AGSS type 1 outlet with Venturi system

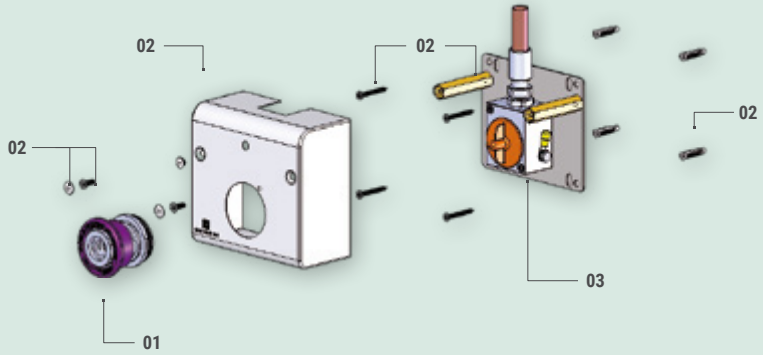

SURFACE INSTALLATION FOR **EN ISO 9170-2 AGSS TYPE 1** OUTLET FOR BLOWER

DIRECTORY - COMPONENTS DETAIL

01. EN ISO 9170-2 AGSS type 1 outlet
02. Surface mounted case with screws and spacers
03. Socket for EN ISO 9170-2 AGSS type 1 outlet for blower

INFO COMPANY: Flow Meter Spa - Via del Lino, 6 - 24040 Levate - Bergamo - ITALIA
Tel. +39 035 594047 I Fax +39 035 59482 I info@flowmeter.it I **www.flowmeter.it**
C.F. e P.Iva IT01737040160